JACK 杰克

快速服务100%

A5系列 A5Series

零件手册
Parts Manual

1

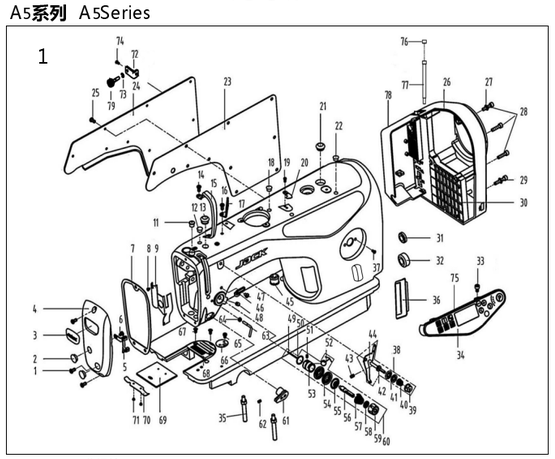

1. 机壳、外装分组件/Machine Frame & Miscellaneous Cover Components

序号 NO.	公司件号 Part NO.	名称 PartName	零件描述 Description	数量 Number
1	101S11001	后窗板螺钉SM3/16'x 28 L=9	Screw SM3/16'x 28 L=9	3
2	10122003	面板调节孔橡塞	Rubber plug	2
3	13837002	商标牌	Head card	1
4	302591	面板（喷漆）	Face plate asm	1
5	13813005	左线钩	Thread guide left	1
6	101S11007	右线钩螺钉SM11/64'x 40 L=6	Screw SM11/64'x40 L=6	1
7	1382 2006	面板垫	Face plate gasket	1
8	101S11027	防油板螺钉SM1/8'x 44 L=3.4	Screw SM1/8'x44 L=3.4	1
9	1041 2007	面部防油板	Face oil shield asm.	1
	1141 2082	面部防油板（ 厚料）	Face oil shield asm.(H)	1
11	10122013	针杆上衬套孔塞	Rubber plug	1
12	10122005	挑线连杆铜螺孔塞	Rubber plug	1
13	10122004	针杆曲柄螺孔塞	Rubber plug	1
14	101S11004	挑线杆护罩螺钉SM3/16'x 28 L=7	Screw SM3/16'x 28 L=7	1
15	13812018	挑线杆护扳手	Thread take-up lever cover	1
16	101S11004	挑线杆护罩螺钉SM3/16'x 28 L=7	Screw SM3/16'x 28 L=7	1
17	13512004	三孔线勾	3-hole thread guide	1
18	10122005	挑线连杆铜螺孔塞	Rubber plug	1
19	114S11015	断线刀螺钉SM9/64'x 40 L=6	Screw SM9/64'x40 L=6	2
20	1141 9001	断线刀	Knife	1
21	2102 2007	油塞	Rubber plug	1
22	1382 2001	操作屏孔塞	Rubber plug	2
23	1382 2007	后窗板垫	Side plate gasket	1
24	302592	后窗板（喷漆）	Side plate	1
25	101S11001	后窗板螺钉SM3/16'x 28 L=9	Screw SM3/16'x 28 L=9	11
26	1381 1031	一体机电控盒宽(触麦克斯)	Electronic control box	1
27	W01009	GB/T97.1-1985垫圈 5	Washer 5	2
28	114S13001	直驱电机螺钉M5x 20	Screw M5x 20	3
29	114S3001	螺栓(内六角)M5x 25	Screw M5x 25	1
30	1403 3016	一体机电控组件(触麦克斯)	Electronic control box	1
31	10122006	送料调节器孔塞	Rubber plug	1
32	10122007	下轴工艺孔塞	Rubber plug	1
33	138S05001	操作面板螺钉	Screw	2
34	1413 3001	一体机电控面板组件(触麦克斯)	Control panel	1
35	140S12001	底板支柱	Machine head stud	2
36	1382 2002	装饰条	Decorative article	1
37	101S11004	螺钉	Screw	2
38	1381 3004000	小夹线器 组件	Thread tension asm.	1
39	138S16019	小夹线器螺母	Thread tension nut	1
40	11227001	小夹线弹簧	Thread tension spring	1
41	11212004	小夹线板	Thread tension disk	2
42	13810008	小夹线器螺柱	Thread tension post	1
43	138S08006	小夹线器固定螺钉SM3/16'x 28 L=7	Screw SM3/16'x 28 L=7	1
44	13812066	过线板	Thread tension guide plate	1
45	14122001	橡皮塞 (四孔)	Rubber plug	1
46	1013 3004	右线钩	Thread guide right	1
47	101S11007	右线钩螺钉SM11/64'x 40 L=6	Screw SM11/64'x40 L=6	1
48	101S1501 0	左铜螺钉SM15/64'x 28 L=10.5	Screw SM15/64'x 28 L=10.5	1
49	10126030	松线钉	Tension release pin	1
50	10122014	挑线簧调节座O型圈	Rubber ring	1
51	101S15005	夹线柔圆螺钉SM9/64'x40 L=5.5	Screw SM9/64'x40 L=5.5	1
52	1012 7001	挑线簧	Thread take-up spring	1
	1012 7031	挑线簧（厚料）	Thread take-up spring(H)	1
53	10103011	挑线簧调节座	Thread tension base	1
54	10112005	夹线板	Thread tension disk	2
55	10112006	松线板	Disk stopper	1
56	101s30002	夹线螺钉	Thread tension post	1
57	1012 7002	夹线弹簧	Thread tension spring A	1
	1142 7050	夹线弹簧（厚料）	Thread tension spring A (H)	1
58	10112007	夹线制动板	Thread disk rotating stopper	1
59	138S16013	夹线螺母	Thread tension nut	1
60	1381 3300500	夹线器组件	Thread tension asm.	1
	1381 3300700	夹线器组件（ 厚）	Thread tension asm.(H)	1
61	1383002700	电子夹线器组件	Nest less e-device	1
62	207S14007	台面紧定螺钉M4X6	Screw M4X6	1
63	1141 3011	固定过线线钩	Thread guide	1
64	401S16001	螺母SM9/64'x40	Nut SM9/64'x40	1
65	138S11002	卷边器座螺钉SM11/64'x40 L=5.5	Screw SM11/64'x40 L=5.5	1
66	1381 2019	卷边器座	Ruler stop seat	1
67	104S17002	针板螺钉(进口) SM11/64'x40	Screw SM11/64'x40	2
68	1141 4006	针板	Needle plate	1
	1131 5001	针板(厚料)	Needle plate(H)	1
69	10115002	推板	Slide plate	1
70	1012 7009	推板簧	Slide plate spring	1
71	101S11019	推板簧螺钉SM3/32'x56 L=2	Screw SM3/32'x56 L=2	2
72	1381 2109	侧面固定板	Fixed plate	1
73	H05018	卡簧3.5x1	Circlip 3.5x1	1
74	S04010	螺钉M4x 5.5	ScrewM4x5.5	1
75	1401 1002	面板座（ 豆荚力 ）	Panel seat	1
76	1292 2015	橡胶塞	Rubber plug	1
77	1382 6009	罩壳台阶销	Pin	1
78	1401 1009	一体机电控后侧盖(触麦克斯)	Side cover	1
79	138S30007	侧面螺钉	Screw	1

2

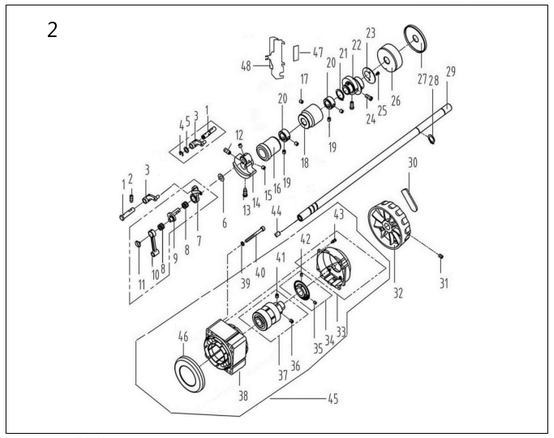

2. 上轴挑线分组件/Main Shaft & Thread Take-up Components

序号 NO.	公司件号 Part NO.	名称 PartName	零件描述 Description	数量 Number
1	10126001	挑线连杆铜（厚料）	Thread take-up connecting rod pin(H)	1
	11326013	挑线连杆铜	Thread take-up connecting rod pin	1
2	101S15001	上轮螺钉 SM15/64'x28 L=15	Screw SM15/64'x28 L=15	1
3	11305010	挑线连杆	Thread take-up connecting rod	1
	10105001	挑线连杆（厚料）	Thread take-up connecting rod(H)	1
4	H05013	GB/T896-1986挡圈	Snap ring	1
5	11328010	垫片	washer	1
6	10112003	针杆曲柄护板	Needle bar crank protecting plate	1
7	1013800100	挑线杆分组件	Thread take-up lever asm.	1
	1133800200	挑线杆组件（ 厚料）	Thread take-up lever asm.(H)	1
8	10124001	挑线杆滚针轴承	Needle bearing	2
9	11310012	挑线曲柄分部件	Thread take-up crank	1
	1011000400	挑线曲柄分部件（厚料）	Thread take-up crank(H)	1
10	10105002	针杆连杆	Needle bar connecting rod	1
11	101S17001	挑线曲柄螺钉（左旋）	Screw	1
12	101S15004	针杆曲柄紧固螺钉 SM9/32'x28 L=16	Screw SM9/32'x28 L=16	1
13	101S11003	针杆曲柄定位螺钉SM9/32'x28 L=16	Screw SM9/32'x28 L=16	1
14	10404001	针杆曲柄	Needle bar crank	1
	1140403 5	针杆曲柄（厚料）	Needle bar crank(H)	
15	101S15002	送料轴挡圈螺钉SM1/4'x40 L=6	Screw SM1/4'x40 L=6	2
16	1140300200	上轴前轴套组件	Main shaft bushing front	1
17	101S15006	夹线器螺钉SM15/64'x28 L=7	Screw SM15/64'x28 L=7	1
18	12203002	主轴中轴套	Main shaft bushing mid	1
19	101S14001	上轴中套挡圈螺钉	Screw	4
20	10108001	上轴挡圈	Main shaft thrust collar	2
21	H03002	挡圈20	Snap ring 20	1
22	11310014	送料偏心轮	Feed eccentric cam	1
	400006	送料偏心轮(厚料)	Feed eccentric cam (H)	1
23	10112017	送料偏心轮盖板	Cover plate	1
24	101S11013	送料偏心轮螺钉 SM1/4'x40 L=13	Screw SM1/4'x40 L=13	2
25	113S11003	护针片螺钉 SM9/64'x40 L=5	Screw SM9/64'x40 L=5	2
26	13803002	上轴后轴套	The rear axle sleeve	1
27	10122105	上轴后套挡油油封	Oil seal	1
28	H03001	GB/T894.1-1986挡圈15	Snap ring 15	1
29	13802060	上轴	Main shaft	1
30	13811021	手轮贴条	Handwheel lable	1
31	S10009	螺钉	Screw	2
32	302830	手轮（喷漆）	Handwheel	1
33	1383300700	电机罩壳组件（配触麦克斯）	Motor cover asm.	1
34	1383300900	电机光栅组件（配触麦 ）	Motor grating sensor asm	1
35	GB/T77-2000	内六角平端紧定螺钉M3x4	Screw M3×4	1
36	GB/T77-2000	内六角平端紧定螺钉M6x 6	Screw M6×6	1
37	1383300400	电机转子总成	Motor rotor	1
38	13833003	电机定子总成（配触麦克斯）	Motor stator	1
39	GB/T93-1987	弹簧5	Spring washer 5	4
40	GB/T70.1 -2000	内六角圆柱头螺钉M5x 50 8.8级	Screw M5×50	4
41	GB/T78-2000	内六角锥端紧定螺钉M6x 8	Screw M6×8	1
42	GB/T78-2000	内六角锥端紧定螺钉M3×4	Screw M3×4	1
43	GB/T9074.8	一十字槽小盘头螺钉组合件M3x 8	Screw	6
44	10122012	上轴孔塞	Rubber plug	1
45	13833050	ZB-MA4-25A光电伺服电机(触麦)	Motor	1
46	13811060	电机绝缘防护罩	Motor insulation shield	1
47	14123001	防油罩 油棉	Oil cotton	1
48	14112004	防油罩	Oil shield	1

3

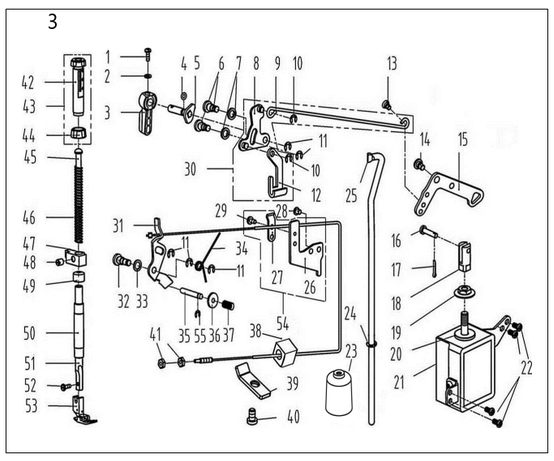

4

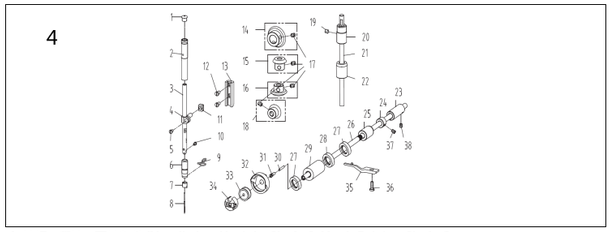

4. 针杆、竖轴、下轴部件/Needle bar,Upright Shaft & Hook Driving Shaft Components

序号 NO.	公司件号 Part NO.	名称 PartName	零件描述 Description	数量 Number
1	10122013	针杆上衬套孔塞	Rubber plug	1
2	10103009	针杆上衬套	Needle bar bushing upper	1
3	11402039	针杆	Needle bar	1
	10102021	针杆（ 厚料）	Needle bar (H)	1
	11402034	针杆（ DLC处理）	Needle bar (A4S-W)	1
4	10138002	针杆连接柱	Needle bar connecting rod	1
5	101S11005	螺钉 SM9/64'x40 L=6	Screw SM9/64'x40 L=6	1
6	10103010	针杆下衬套	Needle bar bushing lower	1
	11303023	针杆下衬套(厚料）	Needle bar bushing lower(H)	1
7	10113002	针杆线勾	Needle bar thread guide	1
	1141 2063	针杆线勾（ 厚料）	Needle bar thread guide(H)	1
8	10117001	机针（ 14# ）	Needle	1
	10117002	机针DPx 5# 21（ 厚料 ）	Needle(H)	1
9	10413001	针杆下衬套线勾	Lower bushing thread guide	1
	10113009	针杆下轴套线钩（ 厚料）	Lower bushing thread guide(H)	1
10	104S11006	支针螺钉(进口) SM1/8'x44 L=4.5	Screw SM1/8'x44 L=4.5	1
11	10109001	针杆连接柱滑块	Slide block	1
12	101S11008	滑块导轨螺钉SM11/64'x40 L=8	Screw SM11/64'x40 L=8	2
13	10109002	针杆接头,滑块导轨	Needle bar guide	1
14	10425004	上轴伞齿轮	Upper shaft bevel gear	1
15	10425003	竖轴上伞齿轮	Upper small bevel gear asm	1
16	10425002	竖轴下伞齿轮	lower large bevel gear asm	1
17	101S15014	齿轮螺钉SM1/4'x40 L=7	Screw SM1/4'x40 L=7	8
18	10425001	下轴伞齿轮	Hook drive shaft bevel gear	1
19	113S11036	一字开槽紧定螺钉SM15/64'x28 L=4.7	Screw SM15/64'x28 L=4.7	1
20	10403020	竖轴上轴套	Upright shaft bushing upper	1
21	10102007	竖轴	Upright shaft	1
22	10403013	竖轴下轴套	Upright shaft bushing lower	1
23	13803037	下轴后轴套	Hook driving shaft bushing back	1
24	10108002	下轴挡圈	Hook driving shaft snap ring	1
25	14003004	下轴中套	Lower shaft middle bushing	1
26	11304003	下轴	Hook driving shaft	1
27	11522001	油封组件12	oil seal 12	2
28	114 2201600	油封组件18	oil seal 18	1
29	14003001	下轴前轴套组件	Hook driving shaft bushing front	1
30	10123009	下轴限油芯	Oil wick	1
31	101S30005	下轴限油螺钉	set screw	1
32	1141 8003	广濑中厚料旋梭(沙"大缝纺范围)	Hook asm (Hirose)	1
	1141 8007	精品旋梭(国产)	Hook asm (China)	1
	1141 8002	德盛有限公司厚料 旋梭(沙德款)	Hook asm (China Desheng) (H)	1
	1141 8004	广濑厚料旋梭 (剧(有尾巴)	Hook asm (Hirose) (H)	1
33	1011 8003	梭心	Bobbin	1
34	1121 8504	梭壳	Bobbin case asm.	1
35	1011 2016	旋梭定位钩	Finger postioner	1
	1011 2032	旋梭定位勾（ 厚料）	Finger postioner(H)	1
36	116S11005	牙架曲柄螺钉 SM11/64'x 40 L=13	Screw SM11/64'x 40 L=13	1
37	101S11012	下轴挡圈螺钉 SM11/64'x 40 L=4.8	Screw SM11/64'x 40 L=4.8	2
38	113S14020	下轴后套螺钉SM11/64'x40 L=6	Screw SM11/64'x 40 L=6	1

3. 压料、自动抬压脚分组件/Presser Bar ，Auto Lifter Components

序号 NO.	公司件号 Part NO.	名称 PartName	零件描述 Description	数量 Number
1	101S11010	压脚扳手螺钉SM9/64'x40 L=11	Screw SM9/64'x40 L=11	1
2	10128002	压脚扳手螺钉垫圈	Washer	1
3	13811029	压脚扳手	Hand lifter	1
4	O01004	O型圈	Rubber ring	1
5	1381000200	压脚扳手凸轮分部件	Hand lifter cam asm.	1
6	101S20001	前杠杆螺纹钉	Screw	2
7	10128015	螺纹钢橡胶垫圈(厚)	Washer(H)	2
8	1381203000	抬压脚前杠杆分部件	Lift front lever component	1
9	10112013	抬压脚拉杆	Knee lifter pull rod	1
10	H05003	GB/T896-1986挡圈 5	Snap ring	2
11	11329020	挡圈 5	Snap ring	5
12	10112010	压脚升降板	Lifting plate	1
13	101S20004	抬压脚拉杆螺钉SM3/16'x32	Hinge Screw SM3/16'x32	1
14	101S20003	后杠杆轴位螺钉SM15/64'x28	Hinge screw SM15/64'x28	1
15	11312034	抬压脚后杠杆	Knee lifter back lever	1
16	11326005	铜子	Pin	1
17	P04001	开口销 GB/T91 2x 14	Cotter pin	1
18	11326006	电磁铁接头	Solenoid connector	1
19	113S16004	法兰螺母M8	Flange nuts M8	1
20	11322008	电磁铁 上垫片	washer	1
21	1413001300	抬压脚 电磁铁组件	Solenoid asm.	1
22	101S11001	后窗板螺钉SM3/16'x 28 L=9	screw SM3/16'x28 L=9	4
23	14022017	抬压脚 顶杆密封精	Seal cap	1
24	W01009	GB/T894.1-1986轴用弹性挡圈-A型5x0.6	Snap ring	1
25	14012015	抬压脚 顶杆	Knee lifter connecting rod	1
26	11212009	松线导管上支架	Wire release bracket upper	1
27	14012010	松线导管上压板	Wire release press plate	1
28	101S11033	油管压板螺钉SM3/16'x28 L=5.8	Screw SM3/16'x28 L=5.8	1
29	113S11004	松线导管压板螺钉M4x8	Screw M4x8	1
30	1381203200	抬压脚前杠杆组件	Knee lifter lever asm	1
31	1401206000	松线夹板组件	Wire release plate asm	1
32	101S20002	松线夹板螺纹钉	Wire release plate pin	1
33	10128015	螺纹钢橡胶垫圈(厚)	Washer(H)	1
34	11427009	松线夹板复位簧	Reset spring	1
35	10126003	松线铆钉	Thread release supporting pin	1
36	10128001	松线铆钉垫片	washer	1
37	10127003	松线铆钉弹簧	Spring	1
38	14022007	松线导管密封塞	Sealing plug	1
39	14012005	松线导管下压板	Wire presser	1
40	101S11008	滑块导轨螺钉SM11/64'x40 L=8	Screw SM11/64'x40 L=8	1
41	113S12001	螺母 SM3/16'x32	Nut SM3/16'x32	2
42	13811027	调压螺钉	Press regulating screw	1
43	1381102700	调压螺钉组件	Presser regulating screw nut asm.	1
44	13811028	调压螺母	Press regulating nut	1
45	10102003	调压导杆	Press regulating guide bar	1
46	11427033	调压簧	Press regulating spring	1
47	13809030	压杆导架	Presser bar guide bracket	1
48	101S15007	压杆导架螺钉 SM1/4'x40 L=8	Screw SM1/4'x40 L=8	1
49	10122112	压杆防油套	Pressure bar oil cover	1
50	10103012	压杆衬套	Presser bar bushing,lower	1
51	10102004	压杆	Presser bar	1
52	101S11009	活压脚螺钉 SM9/64'x40 L=10.5	Screw SM9/64'x40 L=10.5	1
53	1131600600	压脚组件	Presser foot asm	1
	1131600300	压脚组件（ 厚）	Presser foot asm(H)	1
	1411600100	带刀压脚组件（ 沙鸟巢装置专用）	Presser foot asm(For the No Bird's Nest Component	1
54	1401201000	松线导管上支架组件	Wire release bracket upper asm.	1
55	H05012	挡圈4（ 日标）	Snap ring	1

5

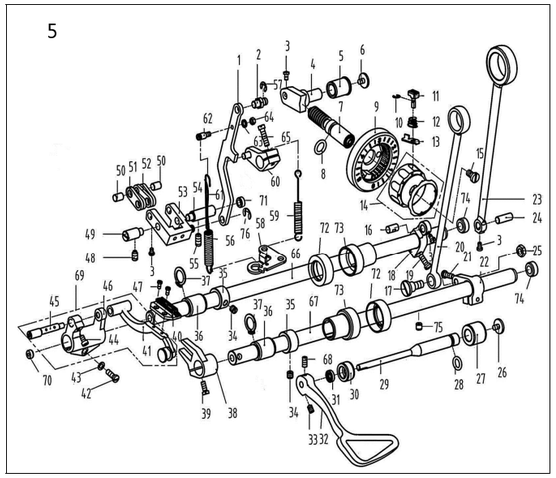

5. 送料分组件/Feed Mechanism Components

序号 NO.	公司件号 Part NO.	名称 PartName	零件描述 Description	数量 Number
1	11405015	倒送料 连杆	Reverse feed connecting rod	1
2	11426021	倒送料 连杆铜	Connecting rod pin	1
3	101S11005	螺钉 SM9/64'x40 L=6	Screw SM9/64'x40 L=6	5
4	10101053	送料调节器	Feed regulator	1
5	11403043	送料调节器轴套	Feed regulator bushing	1
6	101S11023	送料调节器轴端螺钉SM3/16'x28 L=6.5	Screw SM3/16'x28 L=6.5	1
7	13826005	标盘螺柱	Feed regulator stud	1
8	10122016	送料调节螺钉O形圈	Rubber ring	1
9	13811008	固定表盘	Fixing dial plate	1
10	H05018	GB/T896-1986挡圈 3.5	Snap ring 3.5	1
11	13811009	标盘按钮	Dial plate button	1
12	13827002	按钮复位簧	Spring	1
13	13812010	上限位片	Upper limit patch	1
14	1381100700	标盘旋钮组件	Knob component	1
15	101S11022	送料面 旋钮螺钉SM3/16'x28 L=18	Screw SM3/16'x28 L=18	1
16	10126011	送料曲柄销	Feed rocker crank pin	1
17	101S20005	抬牙压杆轴位螺钉 SM9/32'x28	hinge Screw SM9/32'x28	1
18	10104002	送料曲柄	Feed rocker shaft crank	1
19	101S11016	送料曲柄螺钉SM3/16'x28 L=14	Screw SM3/16'x28 L=14	1
20	400093	抬牙连杆	Connecting rod	1
21	101S11016	送料曲柄螺钉 SM3/16'x28 L=14	Screw SM3/16'x28 L=14	1
22	10104004	抬牙后曲柄	Feed driving shaft crank	1
23	400091	送料连杆	Rocker shaft connecting rod	1
24	10126006	送料连杆铜	Connecting rod pin	1
25	101S16003	抬牙连杆轴位螺母 SM9/32'x28	Hinge Screw SM9/32'x28	1
26	101S11023	送料调节器轴端螺钉SM3/16'x28 L=6.5	Screw SM3/16'x28 L=6.5	1
27	13803021	倒送料 轴后轴套	Reverse feed shaft bushing back	1
28	13822003	倒送料 轴O形圈	Rubber ring	1
29	13802010	倒锋送料轴	Reverse feed shaft	1
30	13803020	倒送料 轴中套	Reverse feed shaft bushing mid	1
31	13822056	倒送料 轴中套油封	Mid bushing oil seal	1
32	302665	倒锋扳手（ 喷漆）	Reverse feed lever asm	1
33	138S10010	内六角锥端紧定螺钉M5X8	Screw M5X8	1
34	101S15002	送料轴挡圈螺钉SM1/4'x40 L=6	Screw SM1/4'x40 L=6	4
35	10108003	送料轴挡圈	Feed rocker shaft snap ring	2
36	10403015	轴套	Bushing	2
37	H03001	GB/T894.1-1986挡圈 15	Snap ring 15	2
38	10104003	抬牙叉形曲柄	Driving shaft crank	1
39	101S11020	抬牙叉形曲柄螺钉SM11/64'x40 L=10.5	Screw SM11/64'x40 L=10.5	1
40	11414002	送料牙	Feed dog	1
	11314001	送料牙 (兄弟款)	Feed dog(Brother type)(H)	1
41	470060	牙架	Feed bar asm.	1
42	101S11016	送料曲柄螺钉SM3/16'x28 L=14	Screw SM3/16'x28 L=14	1
43	10128003	牙架座螺钉垫圈	Washer	1
44	101S11025	微位板螺钉SM11/64'x40 L=7	Screw SM11/64'x40 L=7	1
45	11226001	牙架销	Feed bar pin	1
46	480095	牙架座	Feed bar bed.	1
47	101S11018	送料牙螺钉 SM1/8'x44 L=6	Screw SM1/8'x44 L=6	2
48	101S15010	左铜螺钉 SM15/64'x28 L=10.5	Screw SM15/64'x28 L=10.5	1
49	10126009	送料摆动板座左销	Left pin	1
50	11226007	短摆动板连杆销	Connecting pin	2
51	10109005	送料短摆动板	Feed short shaking plate	2
52	10109004	送料长摆动板	Feed long shaking plate	1
53	1400100600	送料摆动板座分部件	Feed shaking plate bed components	1
54	10126010	送料摆动板座右 铜	Right pin	1
55	113S14010	左铜螺钉SM15/64'x28 L=12	Screw SM15/64'x28 L=12	1
56	11427011	送料调节弹簧	Spring	1
57	11329020	开口挡圈5	Snap ring 5	1
58	13812081	拉簧固定板	Fixed plate	1
59	13827006	倒送料 拉簧	Reverse feed pull spring	1
60	1140402700	倒送料 曲柄组件	Feed reverse crank asm.	1
61	11321005	油管	Tube	1
62	114S30007	弹簧悬置螺钉	Screw	1
63	W02015	GB/T93-1987弹簧垫圈M4	Spring washer M4	1
64	114S16004	螺母SM11/64'x40	Nut SM11/64'x40	1
65	S01102	螺钉 SM3/16'x28 L=18	Screw SM3/16'x28 L=18	1
66	14002003	送料轴	Feed rocker shaft	1
67	14002002	抬牙轴	Feed driving shaft	1
68	S10035	GB/T80-2000螺钉M5x 8	Screw	1
69	400689	牙架组件(成品)	Feed bar asm.	1
70	14022003	送料轴前孔塞	spout plug	1
71	14022015	右铜孔塞	spout plug	1
72	1142200800	油封组件22	oil seal	2
73	14003002	送料轴后轴套	axle sleeve	2
74	12422001	橡皮塞 15.5	Rubber plug 15.5	2
75	14022008	送料轴油线孔塞	Rubber plug	2
76	11329020	开口挡圈5	Snap ring 5	1

6

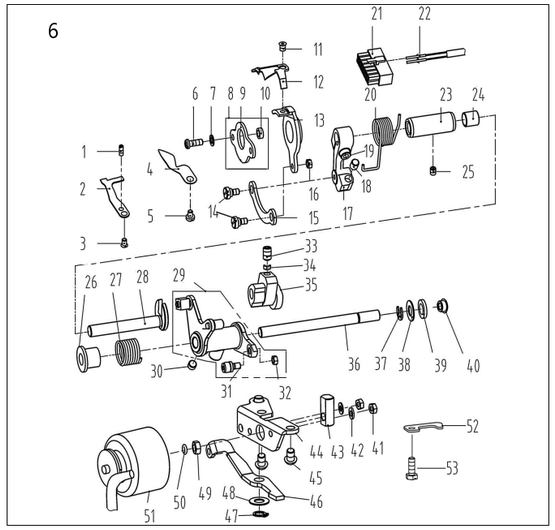

6. 切线装置部件/Thread Trimmer Components

序号 NO.	公司件号 Part NO.	名称 PartName	零件描述 Description	数量 Number
1	113S15002	定刀调节螺钉SM1/8'x44 L=9.5	Screw SM1/8'x44 L=9.5	1
2	11319001	定刀	Secant knife	1
3	113S17002	螺钉SM9/64'x40	Screw SM9/64'x40	1
4	11312003	护针片	Needle guard patch	1
5	201S11009	螺钉SM9/64'x40 L=5.5	Screw SM9/64'x40 L=5.5	1
6	113S11001	螺钉SM11/64'x40 L=12	Screw SM11/64'x40 L=12	2
7	10128003	牙架座螺钉垫圈	Washer	2
8	14012004	刀架压板组件	Knife bracket press component	1
9	14012032	偏心连杆	Eccentric connecting rod	1
10	11303012	短套	Short bushing	2
11	113S17002	活动刀 固定螺钉SM11/64'x40 L=4.4	Screw SM11/64'x40 L=4.4	2
12	11319002	活动刀（薄料长槽）	Motorial knife	1
	11319003	活动刀（厚料长槽）	Motorial knife(H)	1
	14019004	活动刀(去鸟巢装置专用：薄料短槽)	Motorial knife(For the No Bird's Nest	1
13	11307001	剪线刀架	Knife bracket	1
14	113S20001	连杆螺钉SM11/64'x40	hinge Screw SM11/64'x40	2
15	11312005	连杆	Connecting rod	1
16	114S16004	螺母SM11/64'x40	Nut SM11/64'x40	1
17	14004002	切线曲柄	Crank	1
18	11322001	驱动曲柄止动块	Crank driver stopper block	1
19	S05004	螺钉M5x14	Screw M5x14	1
20	11327001	弹簧	Spring	1
21	11230004	14孔接线器	Plug	1
22	11230005	电线插针	Pin	1
23	11303003	切线轴套	Thread cutting shaft bushing	1
24	11503005	驱动曲柄轴衬套	Crank drive shaft bushing	1
25	113S14002	螺钉SM11/64'x40 L=5.5	Screw SM11/64'x40 L=5.5	1
26	11322002	扭簧端盖	Spring cover	1
27	11327002	弹簧	Spring	1
28	11304002	切线凸轮曲柄轴	Crank shaft	1
29	14004001 00	剪线驱动组件	Thread trimmer drive asm.	1
30	116S14003	针杆曲柄圆定位螺钉SM1/4'x40 L=4.5	Screw SM1/4'x40 L=4.5	1
31	11324001	滚柱	Roolling pin	1
32	113S16002	螺母SM11/64'x40	Nut SM11/64'x40	1
33	116S14005	螺钉SM1/4'x40 L=10	Screw SM1/4'x40 L=10	2
34	11309030	凸轮顶柱	Push rod	2
35	11310004	凸轮	Cam	1
	11310011	凸轮（厚料）	Cam(H)	1
36	14002004	切线驱动轴	Shaft	1
37	H05013	GB/T896-1986挡圈	Snap ring	1
38	10112003	针杆曲柄护板	Cunter weight protecting	1
39	11322003	电磁铁缓冲片	Solenoid cushion rubber	1
40	14022013	孔塞8.5	spout plug 8.5	1
41	N01005	螺母 M4	Nut M4	2
42	W02018	GB/T93-1987弹簧垫圈 4	Washer	2
43	11309001	切线电磁铁固销	Solenoid pin	1
44	1401200200	切线电磁铁支架组件	Bracket	1
45	S17002	GB/T70.2-2000内六角平圆头螺钉M6x10	Screw M6x10	2
46	14012001	切线扛杆	Tangent lever	1
47	H03015	GB/T894.1卡簧8	Ring 8	1
48	10112003	针杆曲柄护板	Needle bar crank protecting plate	1
49	112S16006	螺母SM1/4'X40	Nut SM1/4'X40	1
50	O01004	O型圈	Rubber ring	1
51	1403003400	剪线电磁铁组件	Thread trimmer solenoid asm.	1
52	10112022	旋梭供油管压板	Tube press plate	1
53	101S11026	油泵安装螺钉SM15/64＂x28 L=9	Screw SM15/64＂x28 L=9	1

7

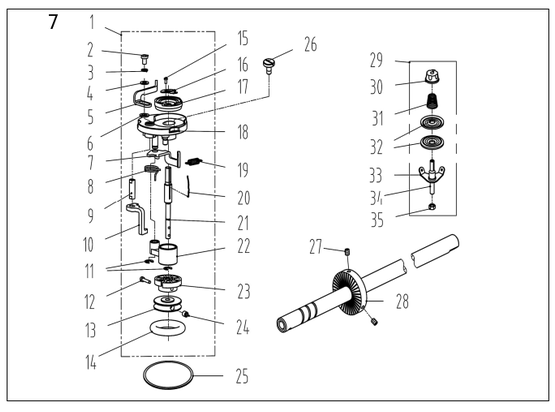

8

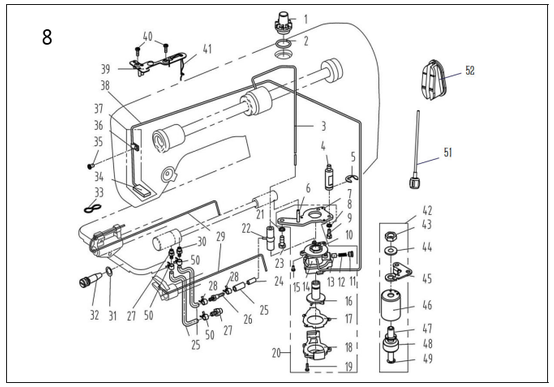

8. 润滑、油量检测组件/Oil Lublication、Oil Measuring Components

序号 NO.	公司件号 Part NO.	名称 PartName	零件描述 Description	数量 Number
1	11211004	油窗	Oil sight window	1
2	10122019	油窗O形圈	Rubber ring	1
3	14121001	上轴供油管	Main shaft oil tube	1
4	112S30005	油泵连接螺柱	Oil pump connecting stud	1
5	11329010	开口挡圈10	Snap ring 10	1
6	10121001	下轴供油管	Hook driving shaft oil tube	1
7	10112020	油泵安装板	Oil pump installing base	1
8	W03002	弹垫	Spring washer	1
9	209S12001	压脚螺钉SM11/64＂x40 L=10.5	Screw SM11/64＂x40 L=10.5	1
10	10103022	油泵体衬套	Oil pump bushing	1
11	101S30007	柱塞螺钉	Plunger Screw	1
12	10127013	柱塞簧	Plunger spring	1
13	10122018	回油柱塞	Plunger	1
14	10120001	油泵体	Oil pump	1
15	504093	油泵螺钉	Screw	3
16	10111003	油泵叶轮	Oil pump impeller	1
17	10112021	油泵叶轮托板	Oil pump impeller cover	1
18	10111007	油泵盖	Lubricating oil pump cover	1
19	101S30006	螺钉	Screw	3
20	1012000100	油泵分部件	Lubricating oil pump component	1
21	W02004	GB/T93-1987弹垫M6	Spring Washer M6	1
22	10136001	供油管接头	Rubber joint	1
23	116S30003	拍牙叉固定螺钉SM15/64'x28 L=14.5	Screw SM15/64'x28 L=14.5	1
24	14021003	铝油管	Aluminum tubing	1
25	14021001	油管	Tubing	1
26	14036004	油盘 油嘴	Oil nozzle	1
27	14036002	回油嘴	Oil nozzle	2
28	11412055	油管卡簧	Oil pipe clamp spring	2
29	10423005	油线	Oil wick	2
30	14036003	供油嘴	Oil nozzle	1
31	14022011	O型圈	Rubber ring	1
32	140S30001	油量调节螺钉	Oil volume adjusting screw	1
33	10127015	回油毡夹	Oil felt clamp	1
34	10123006	回油毡	Oil felt felt	1
35	101S11004	挑线杆护罩螺钉SM3/16'x28 L=7	Screw SM3/16'x28 L=7	1
36	10112023	回油管夹	Oil tube clamp	1
37	10121007	回油管部件	Oil return tube component	1
38	10121008	回油管	Oil return tube	1
39	10112025	油线固定板	Oil wick fixing plate	1
40	101S11010	压脚扳手螺钉SM9/64'x40 L=11	Screw SM9/64'x40 L=11	2
41	10123010	油线	Oil wick	1
42	1383000300	油量检测装置组件	Oil measuring device	1
43	N01009	螺母	Nut	1
44	W02003	弹性垫圈	Washer	1
45	14012006	油量检测装置固定板	Pull spring fixing plate	1
46	14011004	油量检测罩壳	Shell	1
47	14002005	导向柱	Guide pillar	1
48	14011002	浮子	Float	1
49	H05009	开口挡圈	Ring	1
50	20429001	油管卡簧	Oil pipe clamp spring	3
51	13811051	浮标	Buoy	1
52	13811015	油窗	Oil window	1

7. 绕线器组件/ Bobbin Components

序号 NO.	公司件号 Part NO.	名称 PartName	零件描述 Description	数量 Number
1	1413104900	绕线器组件	Bobbin winder asm.	1
2	S05300	GB/T 70.1-2008螺钉M4x6	Screw M4x6	1
3	W02015	GB/T93-1987 垫圈	Washer	1
4	W01008	垫圈4	Washer	1
5	14113002	压线控制板	Pressure line control board	1
6	14112020	垫圈	Washer	1
7	13812110	调节板	Regulating plate	1
8	13827013	滚线复位簧	Reset spring	1
9	14102005	绕线凸轮轴	Winding camshaft	1
10	14111005	绕线凸轮板	Winding cam plate	1
11	11329020	开口挡圈5	Ring 5	1
12	14113001	内六角圆柱 头螺钉SM9/64"x40 L=16	Screw SM9/64"x40 L=16	1
13	14111004	绕线轮	Winding wheel	1
14	O01110	O型圈25x7	O ring 25x7	1
15	504090	GB/T 818-2000螺钉M2x4	Screw M2x4	1
16	14119003	割线刀	Secant cutter	1
17	14111002	绕线衬垫	Winding gasket	1
18	14131001	绕线器装置主座	The main seat	1
19	10127061	复位板拉簧	Drag spring	2
20	14127060	弹簧	Spring	1
21	14102003	绕线器主轴	principal axis	1
22	1380510600	绕线器连杆 组件	Bobbin connecting rod asm	1
23	14111006	主动轮	Driven wheel	1
24	S09103	绕线轮螺钉	Screw M4x4	2
25	11422062	密封 垫	Washer	1
26	114S11003	螺钉SM3/16"x28 L=10	Screw SM3/16"x28 L=10	3
27	S10009	螺钉M6x8	Screw M6x8	2
28	11435013	绕线器驱动轮	Driving wheel	1
29	1411300600	底线夹线器	Bobbin thread tension asm.	1
30	14116019	小夹 线器螺母	Thread tension nut	1
31	11427006	小夹 线弹簧	Spring	1
32	14112015	夹线板	Thread tension disk	2
33	11413022	夹线过线板	Thread tension guide plate	1
34	112S13004	夹线螺钉	Screw	1
35	114S16001	螺母SM11/64"x40	Nut SM11/64"x40	1

36	S05037	GB/T70.1-2000内六角圆柱头螺钉M3x12	Hex cylinder head screw	1
37	14002008	挑线驱动轴	Line drive shaft	1
38	N01051	GB/T6170-2000六角螺母M4	Hexagonal nut	1
39	W02100	GB/T93-1987弹簧垫圈4x0.8	Spring washer	1
40	W01098	GB/T6170-2000小垫圈A级5x 1	Small washer	2
41	11329020	开口挡圈5	Open ring	1
42	14013009	线勾	Wire hook	1

9

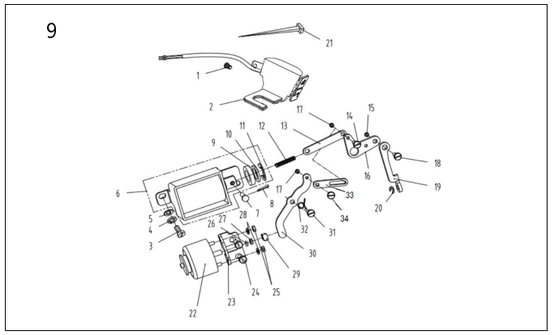

9. 自动倒送料开关、感应抬压脚组件/Automatic Reverse Feed Components

序号 NO.	公司件号 Part NO.	名称 PartName	零件描述 Description	数量 Number
1	101S11004	挑线杆护罩螺钉SM3/16'x28 L=7	Screw SM3/16'x28 L=7	1
2	1383004700	A4-X-0733倒缝开关组件	Auto reverse feed switch asm	1
3	116S30003	拍牙叉固定螺钉SM15/64'x28 L=14.5	Screw SM15/64'x28 L=14.5	2
4	W02004	GB/T93-1987弹垫M6	Spring washer M6	2
5	11628005	拍牙叉固定螺钉垫圈	Washer	2
6	1383003400	自动倒送料电磁铁	Auto reverse feed solenoid	1
7	11326005	销子	Pin	1
8	P04001	开口销 GB/T91 2x14	Cotter pin	1
9	11322040	橡胶垫片	rubber plunger	1
10	11328031	垫片	Washer	1
11	H05014	GB/T896-1986开口挡圈	Snap ring	1
12	11227006	自动倒送料连杆顶弹簧	Plunger spring	1
13	13812034	自动倒送料连杆	Auto reverse feed connecting rod	1
14	141S20004	曲柄铰螺钉SM11/64'x40	Hinge Screw SM11/64'x40	1
15	112S16007	曲柄长螺母SM1/4'x28	Nut SM1/4'x28	1
16	14104005	自动倒送料曲柄	Auto reverse feed crank	1
17	112S16008	曲柄铰螺母SM11/64'x40	Nut SM11/64'x40	1
18	112S20001	曲柄长螺钉 SM1/4'x28	Hinge Screw SM1/4'x28	1
19	11212029	自动倒送料拉杆	Auto reverse feed pull shaft	1
20	14029003	轴用弹性挡圈7(厚0.8mm)	Snap ring 7	1
21	11211005	尼龙扎带	Cable band	9
22	1413003300	短线头 电磁铁组件	Thread trimmer solenoid asm.	1
23	14112002	短线头 电磁铁支架	Bracket	1
24	101S11026	油泵安装螺钉SM15/64"x28 L=9	Screw SM15/64"X28 L=9	2
25	N01001	螺母 M4	Nut M4	2
26	O01004	O型圈	Rubber ring	1
27	112S16006	螺母SM1/4'X40	Nut SM1/4'X40	1
28	W01013	GB/T97.1-1985垫圈4.5	Washer	2
29	14126001	短线头 电磁铁顶销	pin	1
30	14105001	短线头 连杆	rod	1
31	141S20001	倒送料 连杆轴位螺钉	Screw	1
32	14127001	复位拉簧	Lower sensor	1
33	14105002	辅助连杆	rod	1
34	141S20003	轴位螺钉SM11/64'x40	Screw SM11/64"X40	1

10

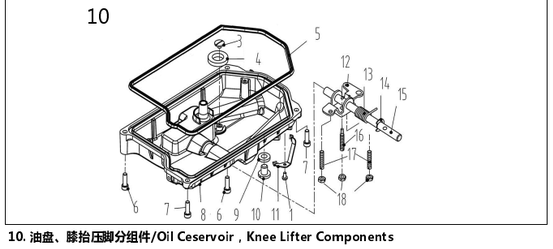

10. 油盘、膝抬压脚分组件/Oil Ceservoir，Knee Lifter Components

序号 NO.	公司件号 Part NO.	名称 PartName	零件描述 Description	数量 Number
1	113S11004	松线导管压板螺钉M4x8	Screw M4x8	1
3	101S11023	送料调节器轴端螺钉	Screw	1
4	10131001	油盘磁铁	Oil reservoir magnet	1
5	14022001	油盘密封垫	Seal	1
6	S05242	油盘固定螺钉M6x40	Screw M6 L=40	2
7	S05240	油盘固定螺钉M6x20	Screw M6 L=20	2
8	13801008	油盘	Oil reservoir	1
9	O01005	GB/T3452.1-1992O型圈 7.5x1.8	O ring 7.5x1.8	1
10	114S11011	齿轮箱盖螺钉	Screw	1
11	14013023	电线压板	Wire clamp	1
12	10112027	抬压脚 双向曲柄	Knee lifter crank	1
13	14027016	双向曲柄扭簧	Knee lifter spring	1
14	H05010	GB/T896-1986挡圈10	Snap ring 10	1
15	1400200100	抬压脚轴组件	Knee lifter shaft	1
16	101S12002	双向曲柄螺钉	Screw	1
17	S07020	双向曲柄限位调节螺钉M6 L=20	Screw M6 L=20	2
18	101S16004	双向曲柄限位调节螺母 M6	Nut M6	3

11

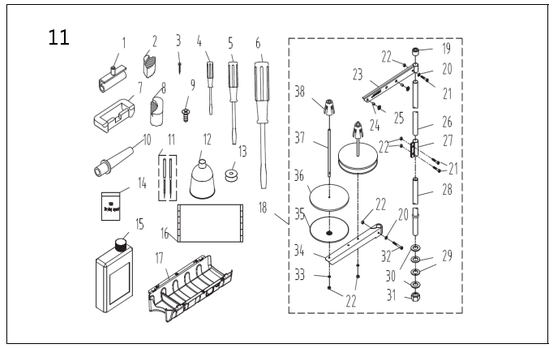

11. 机头附件/Machine Head Accessories

序号 NO.	公司件号 Part NO.	名称 PartName	零件描述 Description	数量 Number
1	1011203100	机头 连接钩部件	Hinge component	2
2	14022022	机头 座垫	Die cushion	2
3	101S30010	机头 连接钩座钉	Nail	4
4	10131004	螺丝刀（小）	Screw driver, small	1
5	10131003	螺丝刀（中）	Screw driver, medium	1
6	20731047	螺丝刀（大）	Screw driver, large	1
7	10122060	机头 连接钩座	Head connecting rubber cushion	2
8	14022023	机头 支架	Nose support	2
9	101S30014	木螺钉M4x20	Wood screw M4x20	4
10	10111011	机头 支柱	Machine head rest pin	1
11	10117021	机针（14#）	Needle	4
12	20131039	漏斗	Funnel	1
13	10118003	梭心	Bobbin	2
14	20131075	干燥剂	Connecting rod	1
15	1011101200	油箱部件	Oiler component	1
16	13831018	防尘罩	Dust cover	1
17	14011001	油盘托盘	Disk tray	1
18	1383100300	线架组件	Thread stand asm.	1
19	20131019	线架杆顶防护橡皮	Spool rest rod rubber cap	1
20	W01047	垫圈 M5	Washer M5	2
21	S04050	螺钉 M5 L=16	Screw M5 L=16	3
22	N01034	螺母 M5	Nut M5	6
23	13831022	上线架过线杆	Spool rest arm upper	1
24	10113011	过线圈（内）	Thread guide ring	2
25	10113010	过线圈(外)	Thread guide ring	2
26	13831019	线架杆上节	Spool rest rod upper	1
27	13831021	线架杆接头	Spool rest rod joint	1
28	13831020	线架杆下节	Spool rest rod lower	1
29	10122106	橡胶 垫圈	Spool rest rod rubber ring	2
30	W01048	垫圈 M16	Washer M16	2
31	N02004	螺母 M16	Spool rest rod nut M16	1
32	S04051	螺钉 M5	Spool rest arm lower screw M5	1
33	W02027	弹簧垫圈 M5	Spring washer M5	2
34	13831023	下线架过线杆	Spool rest arm lower	1
35	13831024	线盘	Spool rest	2
36	20131010	线盘垫	Spool rest cushion	2
37	20131006	线盘钉	Spool pin	2
38	13831025	线团 防松垫	Spool retainer	2

杰克缝纫机股份有限公司
杰克缝纫机
全球销量遥遥领先

公司地址(Address of Company)：
台州市椒江区机场南路15号
No.15 Rd Airport South，Jiaojiang District Taizhou City，Zhejiang，P.R.C
邮编(Zip Code)：318000
国内销售部(Domestic Trade Department)：
电话(TEL)：0086-0576-88177788 88177789
传真(FAX)：0086-0576-88177758
国贸部(International Trade Department)：
电话(TEL)：0086-0576-88177782 88177774
传真(FAX)：0086-0576-88177787
服务热线：400-8876858
http://www.chinajack.com

资料如有更改，恕不另行通知，以实物为准。
You will be not informed if the file has been revised.Please set sample as standard.

请您扫下杰克服务号

www.chinajack.com

2018.12